Mounting Set FNA 008.1700

FNA 008 · FNA 016 · (FA 014 · FA 016 · FAPC 016)

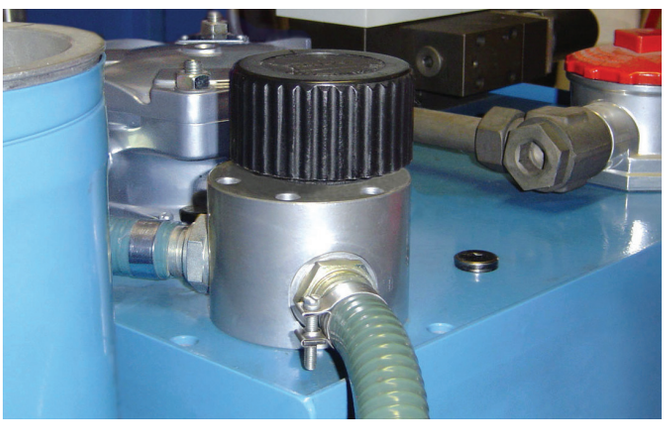

Mounting set attached to the tank

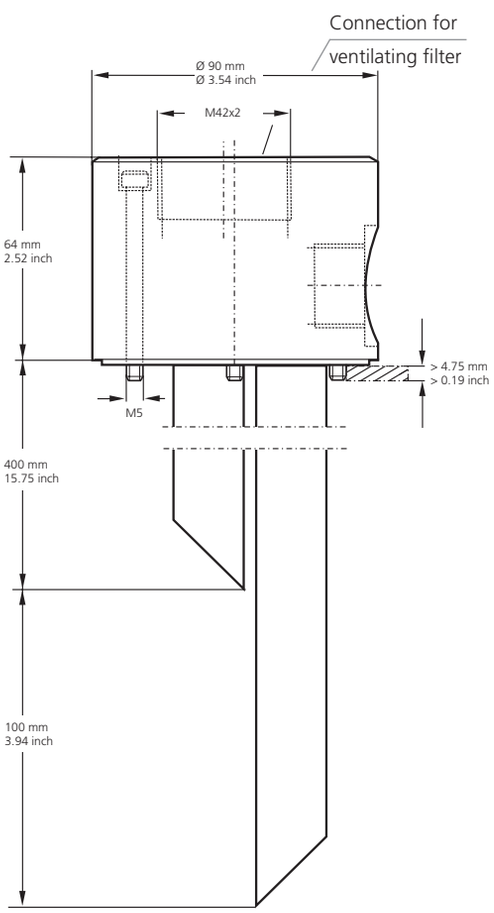

Description

Operating mode and mounting

The mounting set FNA 008.1700 allows easy connection of the supply and discharge pipe to the tank of the ARGO-HYTOS off-line filter units, provided that there is a connection for a ventilating filter at the tank according to the displayed connection scheme (e. g. for ARGO-HYTOS filling and ventilating filter LE.0716 and LE.0817… 0827).
The mounting set can also be used as service connection for ARGO-HYTOS oil service units, e. g. if hydraulic systems require regular oil cleaning. For this purpose, the mounting set is additionally equipped with adequate hose nipples so that the ARGO-HYTOS oil service units can be easily and quickly connected (in this case we recommend to use the suction strainer set FA 016.1775 for pump protection).

Installation of the mounting set

- Instead of the filling filter, the mounting set FNA 008.1700 is attached to the tank.
- The off-line filter unit is tubed or piped to the mounting set.
- The ventilating filter is directly screwed onto the mounting set.

Order No:
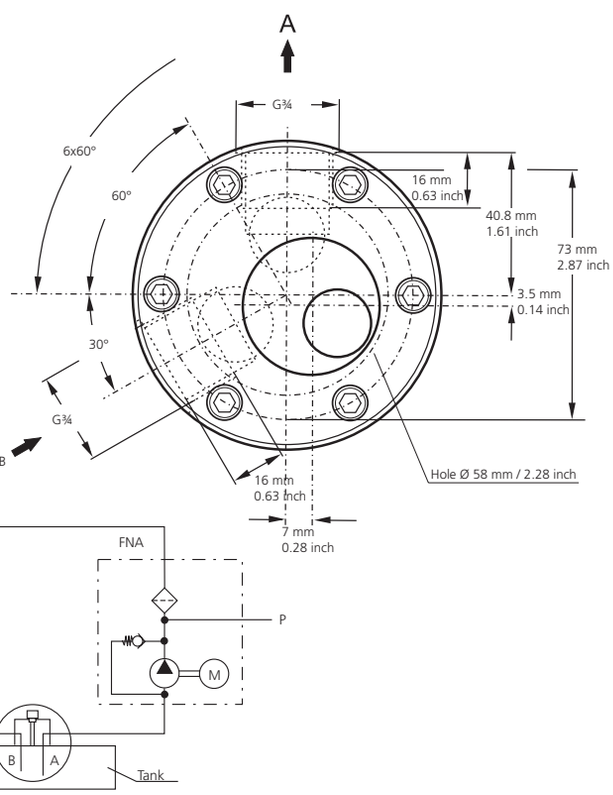
Mounting set FNA 008.1700